General Purpose Compact Limit Switches

Model □LS□

General purpose limit switches with robust construction in an extensive range of models, for use in a wide range of applications.

- **UL/CSA/CE /GB (ccc marking) certified (excluding some models)**
- **UL listing is pending (excluding some models)**
- **2-circuit double break basic switch with rugged die-cast aluminum case**
- **Oil-, water- and dust-proof structure (IP67 protective structure)**
- **Wide range of options available: with neon lamp, with LED lamp, built-in gold-plated contacts, with double seal, corrosion-resistant, heat-resistant, cold-resistant, spatter-guarded, connector type, etc**
- **Operation position setting indicator (roller lever and roller plunger types)**

LIST OF MODELS

Model	Appearance	Roller lever  1LS Series	Plunger  2LS Series	Side roller plunger  3LS Series	Roller plunger  5LS Series	Fork lever lock  6LS Series	Non-directional operating rod lever  8LS Series	Reference page for individual specifications
General purpose	□LS□-J	○	○	○	○	○	○	D-023
Spatter-guarded	□LS□□-JW□	○	—	—	○	—	—	D-050
Ultra long life	1LS-J7□□	○	—	—	—	—	—	D-058
Weather resistant	1LS-J8□□	○	—	—	—	—	—	D-067
All stainless steel	1LS□-J401	○	—	—	—	—	—	D-071

STANDARD, GENERAL PURPOSE COMPACT TYPE

Most versatile LS compact limit-switch model, used in a wide range of applications.

- Wide range of models includes standard, high sensitivity, high overtravel, T.T. 90˚, light operation and lock operation types.
- Wide range of actuator types.
- Certified compliance with a variety of international standards (excluding some models) (UL/CSA, EN 60947-5-1, GB14048.5-2001etc.)
- Connector/preleaded connector also available.
- With LED lamp (12V to 125 Vac/dc). Neon lamp also available.
- Wide range of models includes double-sealed, corrosion-resistant, heat-resistant, and cold-resistant types.
- Low current load model also available.
- Sequencer-compatible indicator
  The energizing current of models with an LED indicator is 0.6 mA max.

STANDARDS COMPLIANCE

Certifying Body	Standard	File No.
UL	UL 1054	E 37559
CSA	CSA C22.2 No.55	LR 61643
TÜV	EN 60947-5-1	R 9451261
CQC	GB14048.5	2003010305083775

* For applicable models, refer to the CATALOG LISTING.

PERFORMANCE

Item		Model / Catalog listing	Roller lever 1LS□-J□□□	Plunger 2LS□-J□	Side roller plunger 3LS1-J	Roller plunger 5LS□-J	Fork lever lock 6LS□-J	Non-directional operation type 8LS□-J
Standards	Compliance		NECA C 4508/JIS C 8201-5-1, IEC 60947-5-1					
	Certification *1		UL1054, CSA C22.5 No.55, EN 60947-5-1, GB 14048.5-2001					
Structure	Contact form		2-circuit double break					
	Contact type	Standard load	Silver, rivet					
		Low current load	Gold-plated silver, rivet					
	Terminal type		M4 screw (binding head machine screw with toothed washer), DIN 4-pin connector (M12 size), preleaded					
	Protective structure		IP67 (IEC60529, JIS C 0920)					
	Pollution level		3 (EN 60947-5-1)*2					
Electrical performance (1): General characteristics	Electrical rating		**See page D-026.**					
	Dielectric strength		Between non-continuous terminals : 1,000 Vac, 50/60 Hz for 1 minute (standard operating characteristics type) : 600 Vac, 50/60 Hz for 1 minute (roller lever, high sensitivity characteristics type) Between each terminal and non-live metal part : 2,000 Vac, 50/60 Hz for 1 minute. Between each terminal and ground : 2,000 Vac, 50/60 Hz for 1 minute (only G-type products with ground terminals).					
	Insulation resistance		Min. 100 MΩ(by 500 Vdc megger)					
	Initial contact resistance	Standard load	Max. 50 mΩ(6 to 8 Vdc, thermal current 1A, voltage drop method)					
		Low current load	Max. 100 mΩ(6 to 8 Vdc, thermal current 0.1A, voltage drop method)					
		Connector	Max. 40 mΩ(excluding fixed resistance such as cable)					
	Contact voltage/min.current		24V 10 mA, 12V 20 mA (standard load), 5V 10 mA (low current load)					
Electrical performance (2) EN60947-5-1 GB140 48.5-2001	Rated operating voltage		120/240 Vac, 30 Vdc					
	Rated thermal current (Ith)		Silver contacts: 10A. Gold-plated contacts: 1A.					
	Rated frequency		45 to 65 Hz and DC					
	Short-circuit protection		TÜV F10A fuse (IEC 60127) / CQC instant blowing fuses: silver contacts 15A, gold contacts 3A / TÜV					
	Rated insulating voltage (Ui)		125 / 250 Vac					
	Rated conditional short-circuit current		1,000A					
	Switching overvoltage		Category III (IEC 60204-1)					
	Rated impulse dielectric strength (Uimp)		Between each terminal and ground, and between terminals: 2,500V.					
Mechanical performance	Actuator strength		Withstands load 5 times O.F. for 1 minute (in operating direction)					
	Terminal strength		Withstands tightening torque of 1.5 N·m for 1 minute					
	Impact resistance		High sensitivity roller lever type: 200 m/s² in free and total travel positions Light operation roller lever & non-directional roller lever types: 200 m/s² in total travel position Non-directional operation type: 300 m/s² in total travel position Models other than the above: 300 m/s² in free and total travel positions Contact opening for 1 ms max. in free and total travel positions (NECA C 4508)					
	Vibration resistance		1.5 mm peak-to-peak amplitude, frequency 10 to 55 Hz, for 2 continuous hours (NECA C 4508) High sensitivity roller lever type & non-directional type: In total travel position Models other than the above: In free and total travel positions Contact opening for 1 ms max. in free and total travel positions					
	Allowable operating speed	Model	Other than on the right	1LS19-J	2LS1-J	2LS-J6	3LS1-J	5LS1-J/5LS7-J
		Max.	0.5 m/s	0.5 m/s	0.5 m/s	0.2 m/s	0.3 m/s	0.5 m/s
		Min.	1.7 mm/s	0.4 mm/s	1.0 mm/s	1.0 mm/s	0.5 mm/s	0.2 mm/s
		Model	8LS3-J	8LS125-J	8LS152-J			
		Max.	0.5 m/s	0.3 m/s	0.3 m/s			
		Min.	10 mm/s	50 mm/s	20 mm/s			
	Operating frequency		At max. speed, actuator is not damaged. At min. speed, contact instability lasts 0.1 s max.					
	Operating frequency		Light operation roller lever/ heat-resistant/ cold-resistant: max. 60 operations/minute, Models other than the above: max. 120 operations/minute					
	Cable pullout strength		Min. 100 N					
Life	Mechanical life	Model	Other than on the right	**1LS-J50**, **2LS-J6**, cold-resistant type	**3LS1-J**	**6LS□J**, heat-resistant type		
		Life	Min. 10 million operations	Min. 1 million operations	Min. 5 million operations	Min. 2 million operations		
			(At 70% to 100% of the rated overtravel.)					
	Electrical life	Model	Standard load built-in switch	Standard load double seal built-in switch		Low current load built-in switch		
		Life	Min. 500,000 operations at rated load	Min. 200,000 operations at rated load		Min. 2 million operations at rated load		
			Operating frequency: Above conditions must be satisfied at 20 operations/minute.					
Ambient operating conditions	Temperature		Standard model (standard load and low current load) : –10 to +70˚C(freezing not allowed)					
			Double seal type : **1LS19-JS**: 0 to +70˚C(freezing not allowed) **2LS, 3LS,5LS, 8LS125-JS**: +5 to +70˚C(freezing not allowed) Double seal type other than above: –5 to +70˚C(freezing not allowed)					
			Heat-resistant type : –10 to +120˚C(freezing not allowed)					
			Cold-resistant type : –40 to +70˚C(freezing not allowed)					
	Humidity		Max. 98% RH*3					
Recommended tightening torque	Body		Front: 5 to 6 N•m (M5 hexagon socket head cap screw). Back: 5 to 6 N•m (M6 screws)					
	Lever		4 to 5.2 N•m (M5 hexagon socket head bolt)					
	Terminal		1.0 to 1.4 N•m (M4 binding head machine screw)					
	Cover		1.3 to 1.7 N•m (M4 small round head screw)					
	Head		0.8 to 1.2 N•m (M3.5 small round head screw)					
	Cap nut		2 to 3 N•m (M22 screw for 3LS)					
	Piano wire lever		0.6 to 0.8 N•m (M3 hexagon head set screw)					
	Connector tightening torque		0.4 to 0.6 N•m (M12 ring)					

Notes: Mechanical performance values for the roller lever type are for lever length of 38.1 mm.
*1. Some models do not fall under this category. *2. EN 60947-5-1 and GB 14048.5-2001 applies only to G-type products with a ground terminal. *3. Max. 95% RH for connector and preleaded connector types

●Contact type

2-circuit double break

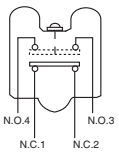

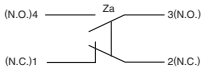

EN60947-5-1

Connector with cable

See page F-001

ORDER GUIDE

●Switch body (contact your dealer for models not listed in the following table)

Actuator		Operating characteristics			Basic catalog listing	Options		
Name	Shape	Max. O.F. (operating force)	Max. P.T. (pretravel)	Min. T.T. (total travel)		With LED lamp, 12 to 125 Vac/dc EC	With neon lamp, 100/200 Vac E	Double seal S
Roller lever		13.4 N	Standard model 20˚	Standard travel50˚	1LS1-J	1LS1-JEC	1LS1-JE	1LS1-JS
			High sensitivity 5˚	Standard travel50˚	1LS19-J	1LS19-JEC	1LS19-JE	1LS19-JS
		8.9 N	Standard model 20˚	High overtravel80˚	1LS-J500	1LS-J500EC	1LS-J500E	1LS-J500S
			High sensitivity 10˚	High overtravel80˚	1LS-J550	1LS-J550EC	1LS-J550E	1LS-J550S
			Standard model 30˚	High overtravel90˚	1LS-J50	1LS-J50EC	1LS-J50E	1LS-J50S
Adjustable roller lever*1		13.4 N	Standard model 20˚	Standard travel50˚	1LS3-J	1LS3-JEC	1LS3-JE	1LS3-JS
		8.9 N	Standard model 20˚	High overtravel80˚	1LS-J503	1LS-J503EC	1LS-J503E	1LS-J503S
			High sensitivity 10˚	High overtravel80˚	1LS-J553	1LS-J553EC	1LS-J553E	1LS-J553S
Light operation rod lever*2		1.4 N	Standard model 20˚	Standard travel50˚	1LS10-J	1LS10-JEC	1LS10-JE	1LS10-JS
Lever-less type		13.4 N *1	Standard model 20˚	Standard travel50˚	1LS2-J	1LS2-JEC	1LS2-JE	1LS2-JS
			High sensitivity 5˚	Standard travel50˚	1LS9-J	1LS9-JEC	—	—
		8.9 N *1	Standard model 20˚	High overtravel80˚	1LS-J501	1LS-J501EC	1LS-J501E	1LS-J501S
			High sensitivity 10˚	High overtravel80˚	1LS-J551	1LS-J551EC	1LS-J551E	1LS-J551S
			Standard model 30˚	High overtravel90˚	1LS-J51	1LS-J51EC	1LS-J51E	1LS-J51S
		1.4 N *2	Standard model 20˚	Standard travel50˚	1LS23-J	—	1LS23-JE	—
Plunger		26.7 N	1.7 mm	8.1 mm	2LS1-J	2LS1-JEC	2LS1-JE	2LS1-JS
Ball plunger		26.7 N	1.7 mm	5.7 mm	2LS-J6	2LS-J6EC	2LS-J6E	—
Side roller plunger		40.1 N	2.77 mm	8.4 mm	3LS1-J	3LS1-JEC	3LS1-JE	3LS1-JS
Roller plunger		26.7 N	1.7 mm	7.3 mm	5LS1-J	5LS1-JEC	5LS1-JE	5LS1-JS
Boot seal roller plunger		15.7 N	1.7 mm	7.3 mm	5LS7-J	5LS7-JEC	5LS7-JE	5LS7-JS
Fork lever lock		8.9 N	60˚	90˚	6LS1-J	6LS1-JEC	6LS1-JE	6LS1-JS
		8.9 N	60˚	90˚	6LS3-J	6LS3-JEC	6LS3-JE	6LS3-JS
Non-directional operation type: Spring rod		1.4 N	28.6 mm	—	8LS3-J	8LS3-JEC	8LS3-JE	8LS3-JS
Non-directional operation type: Steel wire light operation		0.28 N	55 mm	—	8LS125-J	8LS125-JEC	8LS125-JE	8LS125-JS
Non-directional operation type: Coil spring		1.4 N	28.6 mm	—	8LS152-J	8LS152-JEC	8LS152-JE	8LS152-JS

*1. Values are for lever length of 38.1 mm.
*2. Values are for lever length of 141.2 mm.
UL/CSA/GB (ccc marking) approved products
UL/CSA/CE/GB-approved products
All catalog listing are GB approved products.

Options								
Double seal + LED SEC	Double seal + neon lamp SE	Low current load K	EN/GB-compliant with GND terminal G	EN/GB-compliant with GND + LED GEC	EN/GB-compliant with GND + LED & dbl seal SGEC	Corrosion-resistant type M	Heat-resistant type H	Cold-resistant type L
1LS1-JSEC	1LS1-JSE	1LS1-JK	1LS1-JG	1LS1-JGEC	1LS1-JSGEC	1LS1-JM	1LS1-JH	1LS1-JL
1LS19-JSEC	1LS19-JSE	1LS19-JK	1LS19-JG	1LS19-JGEC	1LS19-JSGEC	1LS19-JM	1LS19-JH	1LS19-JL
1LS-J500SEC	1LS-J500SE	1LS-J500K	1LS-J500G	1LS-J500GEC	1LS-J500SGEC	1LS-J500M	1LS-J500H	1LS-J500L
1LS-J550SEC	1LS-J550SE	1LS-J550K	1LS-J550G	1LS-J550GEC	1LS-J550SGEC	1LS-J550M	1LS-J550H	—
1LS-J50SEC	—	1LS-J50K	1LS-J50G	1LS-J50GEC	1LS-J50SGEC	—	1LS-J50H	—
1LS3-JSEC	1LS3-JSE	1LS3-JK	1LS3-JG	1LS3-JGEC	1LS3-JSGEC	1LS3-JM	1LS3-JH	1LS3-JL
1LS-J503SEC	1LS-J503SE	1LS-J503K	1LS-J503G	1LS-J503GEC	1LS-J503SGEC	1LS-J503M	1LS-J503H	1LS-J503L
1LS-J553SEC	—	1LS-J553K	1LS-J553G	1LS-J553GEC	1LS-J553SGEC	—	—	—
1LS10-JSEC	1LS10-JSE	1LS10-JK	1LS10-JG	1LS10-JGEC	1LS10-JSGEC	—	—	—
—	—	—	—	1LS2-JGEC	1LS2-JSGEC	1LS2-JM	1LS2-JH	—
—	—	1LS9-JK	—	1LS9-JGEC	1LS9-JSGEC	—	—	—
—	—	1LS-J501K	—	1LS-J501GEC	1LS-J501SGEC	—	—	1LS-J501L
1LS-J551SEC	—	—	—	1LS-J551GEC	1LS-J551SGEC	—	—	—
—	—	1LS-J51K	—	1LS-J51GEC	1LS-J51SGEC	—	—	1LS-J51L
—	—	—	—	—	—	—	—	—
2LS1-JSEC	2LS1-JSE	2LS1-JK	2LS1-JG	2LS1-JGEC	2LS1-JSGEC	2LS1-JM	2LS1-JH	—
2LS-J6SEC	2LS-J6SE	2LS-J6K	2LS-J6G	2LS-J6GEC	2LS-J6SGEC	—	—	—
3LS1-JSEC	3LS1-JSE	3LS1-JK	3LS1-JG	3LS1-JGEC	3LS1-JSGEC	—	—	3LS1-JL
5LS1-JSEC	5LS1-JSE	5LS1-JK	5LS1-JG	5LS1-JGEC	5LS1-JSGEC	—	5LS1-JH	5LS1-JL
5LS7-JSEC	5LS7-JSE	5LS7-JK	5LS7-JG	5LS7-JGEC	5LS7-JSGEC	—	—	—
6LS1-JSEC	6LS1-JSE	6LS1-JK	6LS1-JG	6LS1-JGEC	6LS1-JSGEC	—	—	—
6LS3-JSEC	—	6LS3-JK	6LS3-JG	6LS3-JGEC	6LS3-JSGEC	—	—	—
8LS3-JSEC	—	8LS3-JK	8LS3-JG	8LS3-JGEC	8LS3-JSGEC	—	8LS3-JH	—
8LS125-JSEC	8LS125-JSE	8LS125-JK	—	8LS125-JGEC	8LS125-JSGEC	—	—	—
8LS152-JSEC	8LS152-JSE	8LS152-JK	—	8LS152-JGEC	8LS152-JSGEC	—	—	8LS152-JL

Connector with cable
See page F-001

●Connector type switch body

Actuator		Operating characteristics				Options			
Name	Shape	Max. O.F. (operating) force	Max. P.T. (pretravel)	Min. T.T. (total travel)		Connector +LED EC-PD	Preleaded connector* +LED EC-PD03	Connector+ double seal+LED SEC-PD	Preleaded connector* +dbl seal+LED SEC-PD03
Roller lever		13.4 N	Standard model 20°	Standard travel 50°		1LS1-JEC-PD	1LS1-JEC-PD03	1LS1-JSEC-PD	1LS1-JSEC-PD03
			High sensitivity 5°	Standard travel 35°		1LS19-JEC-PD	1LS19-JEC-PD03	1LS19-JSEC-PD	1LS19-JSEC-PD03
		8.9 N	Standard model 20°	High overtravel 75°		1LS-J500EC-PD	1LS-J500EC-PD03	1LS-J500SEC-PD	1LS-J500SEC-PD03
			High sensitivity 10°	High overtravel 75°		1LS-J550EC-PD	1LS-J550EC-PD03	1LS-J550SEC-PD	1LS-J550SEC-PD03
Roller plunger		26.7 N	1.7 mm	7.3 mm		5LS1-JEC-PD	5LS1-JEC-PD03	5LS1-JSEC-PD	5LS1-JSEC-PD03
Boot seal roller plunger		15.7 N	1.7 mm	7.3 mm		5LS7-JEC-PD	5LS7-JEC-PD03	5LS7-JSEC-PD	5LS7-JSEC-PD03

*(UL/CSA(C-UL) approved products)

●Quick Lock type

Actuator		Operating characteristics				Options	
Name	Shape	Max. O.F. (operating) force	Max. P.T. (pretravel)	Min. T.T. (total travel)		Preleaded connector* +LED EC-SD03	Connector+ double seal+LED SEC-SD03
Roller lever		13.4 N	Standard model 20°	Standard travel 50°		1LS1-JEC-SD03	1LS1-JSEC-SD03
			High sensitivity 5°	Standard travel 50°		1LS19-JEC-SD03	1LS19-JSEC-SD03
		8.9 N	Standard model 20°	High overtravel 80°		1LS-J500EC-SD03	1LS-J500SEC-SD03
			High sensitivity 10°	High overtravel 80°		1LS-J550EC-SD03	1LS-J550SEC-SD03

*(UL/CSA(C-UL) approved products)

Compatible with OMRON Smartclick connectors.
Smartclick Smartclick is a registered trademark of OMRON Corporation.

●Resin filled type

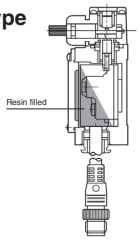

Resin filling

- Double-seal type has a sealed internal switch
- Places where coolant might seep, like the body cover and conduit, are filled with epoxy resin.
- Resin filling plus an ultra long life limit switch, for enhanced reliability.

		PT	TT	Base catalog listing	Catalog listing			
					DC preleaded connector, 30 cm + LED	DC preleaded connector, 30 cm	Preleaded connector with 4 assignable pins, 30 cm + LED	Preleaded, 5 m +LED
Standard LS	Roller lever	Standard model 20°	80°	1LS-J500	1LS-J500SEC-MD03	1LS-J500S-MD03	1LS-J500SEC-MP03	1LS-J500SEC-N35
		High sensitivity 10°	80°	1LS-J550	1LS-J550SEC-MD03	1LS-J550S-MD03	1LS-J550SEC-MP03	1LS-J550SEC-N35
	Roller plunger	1.7 mm	7.3 mm	5LS1-J	5LS1-JSEC-MD03	5LS1-JS-MD03	5LS1-JSEC-MP03	5LS1-JSEC-N35
	Boot seal roller plunger	1.7 mm	7.3 mm	5LS7-J	5LS7-JSEC-MD03	5LS7-JS-MD03	5LS7-JSEC-MP03	5LS7-JSEC-N35
Long life LS	Roller lever	Standard model 20°	50°	1LS-J700	1LS-J700SEC-MD03	1LS-J700S-MD03	1LS-J700SEC-MP03	1LS-J700SEC-N35
		High sensitivity 5°	50°	1LS-J710	1LS-J710SEC-MD03	1LS-J710S-MD03	1LS-J710SEC-MP03	1LS-J710SEC-N35
		Standard model 20°	80°	1LS-J720	1LS-J720SEC-MD03	1LS-J720S-MD03	1LS-J720SEC-MP03	1LS-J720SEC-N35
		High sensitivity 10°	80°	1LS-J730	1LS-J730SEC-MD03	1LS-J730S-MD03	1LS-J730SEC-MP03	1LS-J730SEC-N35

Note: Specifications and dimensions are the same as those of the base catalog listing.

ELECTRICAL RATING

●2-circuit double break

Indicator type	None		100/200 Vac with neon lamp		12 to 125 Vac/dc with LED lamp	
Model	**Catalog listing**	**Electrical rating**	**Catalog listing**	**Electrical rating**	**Catalog listing**	**Electrical rating**
General-purpose	**□LS□-J**	125, 250, 480 Vac 10A 125 Vac 1/2HP 250 Vac 1HP 125 Vdc 0.8A 250 Vdc 0.4A	**□LS□-JE**	125, 250 Vac 5A	**□LS□-JEC**	125 Vac 5A 125 Vdc 0.8A
General-purpose, double seal	**□LS□-JS**	125, 250 Vac 5A 125 Vac 1/8HP 250 Vac 1/4HP 125 Vdc 0.8A 250 Vdc 0.4A	**□LS□-JSE**	125, 250 Vac 5A	**□LS□-JSEC**	125 Vac 5A 125 Vdc 0.8A
General-purpose, gold plated contacts	**□LS□-JK**	125 Vac 0.1A 30 Vdc 0.1A	**□LS□-JKE**	125 Vac 0.1A	**□LS□-JKEC**	125 Vac 0.1A 30 Vdc 0.1A
General-purpose (high sensitivity)	**1LS19-J** **1LS-J55□**	125, 250, 480 Vac 10A 125 Vac 1/8HP 250 Vac 1/4HP 125 Vdc 0.4A 250 Vdc 0.2A	**1LS19-JE** **1LS-J55□E**	125, 250 Vac 5A	**1LS19-JEC** **1LS-J55□EC**	125 Vac 5A
General-purpose (high sensitivity), dbl seal	**1LS19-JS** **1LS-J55□S**	125, 250 Vac 5A 125 Vac 1/8HP 250 Vac 1/4HP	**1LS19-JSE** **1LS-J55□SE**	125, 250 Vac 5A	**1LS19-JSEC** **1LS-J55□SEC**	125 Vac 5A
General-purpose, DC connector/ preleaded connector	—	—	—	—	**□LS□-JEC-PD** **□LS□-JEC-PD03**	30 Vdc 3A
General-purpose, AC connector/ preleaded connector	—	—	—	—	**□LS□-JEC-PA** **□LS□-JEC-PA03**	125 Vac 3A 30 Vdc 3A

●UL electrical ratings

		Electrical rating	Load	No. of cycles
1LS1-J **No indicator lamp**	**Ag**	A300	Pilot Duty	6,000
		3 A, DC 30 V	DC General	6,000
		0.4 A, DC 125 V	DC General	6,000
	Au	0.1 A, AC 125 V	AC General	6,000
		0.1 A, DC 30 V	DC General	6,000
1LS1-JEC **With a neon lamp**	**Ag**	A300	Pilot Duty	6,000
	Au	0.1 A, AC 125 V	AC General	6,000
1LS1-JEC **With an LED**	**Ag**	B150	Pilot Duty	6,000
		3 A, DC 30 V	DC General	6,000
		0.4 A, DC 125 V	DC General	6,000
	Au	0.1 A, AC 125 V	AC General	6,000
		0.1 A, DC 30 V	DC General	6,000
1LS1-JE7-PD **With an LED (with a connector/connector and cable)**	**Ag**	3 A, DC 30 V	DC General	6,000
	Au	0.1 A, DC 30 V	DC General	6,000

Enclosure: Type 1
Maximum allowable ambient temperature: 40 °C

●EN/GB-compliant model ratings (G type, with ground terminal)

	Application category	Rating	Rated thermal current (Ith)
Standard load type	AC-15	3.0A 240 Vac	10A
	DC-12	0.4A 30 Vdc	10A
Low current load type	AC-12	0.1A 125 Vac	1A
	DC-12	0.1A 30 Vdc	1A

●Reference rating (Ratings fluctuate according to the operating environment and type of load. Verify values on an actual operating unit.)

AC rating	125 Vac				250 Vac				480 Vac	
Typical model: 1LS1-J	Resistance	Induction	Electric motor		Resistance	Induction	Electric motor		Resistance	Induction
			N.C.	N.O.			N.C.	N.O.		
	10	6	4	2	10	6	3	1.5	6	4
DC rating	8 Vdc		14 Vdc		30 Vdc		115 Vdc		230 Vdc	
Typical model: 1LS1-J	Resistance	Induction	Resistance	Induction	Resistance	Induction	Resistance	Induction	Resistance	Induction
	10	6	10	6	6	4	0.8	0.2	0.4	0.1

Note: "Induction" refers to a load having a power factor of 0.4 and time constant of 7 ms (DC). "Electric motor" refers to a load having a value of six times the inrush current.

Connector with cable
See page F-001

LIFE VS. LOAD CURRENT CHARACTERISTICS

● **1LS□-J/5LS□-J**

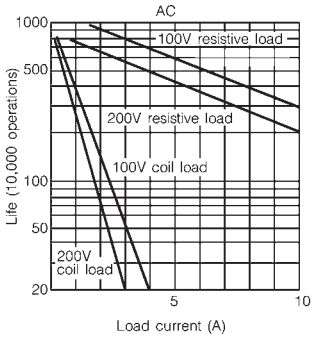

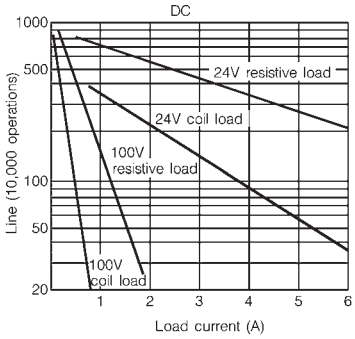

Operating frequency 1,800 operations/h

CONNECTORS

●LS Series connectors

Models (e.g. **2LS□-J□, 8LS□-J**) for which a complete model No. is not given can be modified into the connector type by attaching the separate parts indicated below to a standard **LS** Series body.

Catalog listing	Name	Appearance	Power supply	Number of leads 2 leads	Number of leads 4 leads	Pin layout
LS-PA5A2	**PA5** Series sealed connector with cable	2-lead type / 4-lead type	AC	○	—	Black / White
LS-PA5A4				—	○	
LS-PA5D2			DC	○	—	Green / Red / Black / White
LS-PA5D4				—	○	

Assembly method

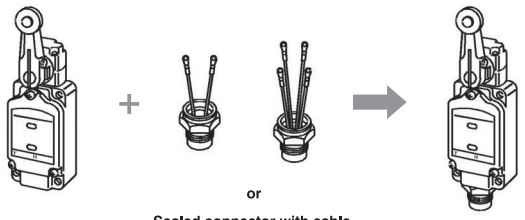

Standard LS model + **Sealed connector with cable, model No. LS-PA5□□** (or) → **Connector type LS**

Wiring method

2-lead type: catalog listing LS-PA5□2

N.O. wiring

N.C. wiring ＊Note

4-lead type: catalog listing LS-PA5□4

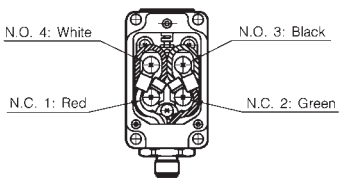

Connector		Internal switch
Contact No.	Lead color	Terminal No.
1	—	—
2	—	—
3	Black	NO.3
4	White	NO.4

Connector		Internal switch
Contact No.	Lead color	Terminal No.
1	Red	NO.1 (N.C.)
2	Green	NO.2 (N.C.)
3	Black	NO.3 (N.O.)
4	White	NO.4 (N.O.)

*Even in an N.C. wiring connection, N.C. contact assignments are Nos. 3 and 4.

●Preleaded connector for LS Series

Models (e.g. **2LS□-J□, 8LS□-J**) for which a complete model No. is not given can be modified into the preleaded connector type by attaching the separate parts indicated below to a standard **LS** Series body.

Catalog listing	Name	Appearance	Power supply	Cable length	Number of leads
PA5-4IBX03HK4-E	**PA5** Series connector cable		DC	30 cm	4
PA5-4JBX03HK4-E			AC		
PA1-A10PF	Sealed connector		—	—	—

Assembly method

Standard **LS** model + Connector cable, catalog listing **PA5-4□BX03HK4-E** + Sealed connector, catalog listing **PA1-A10PF** → Preleaded connector, type **LS**

Wiring method

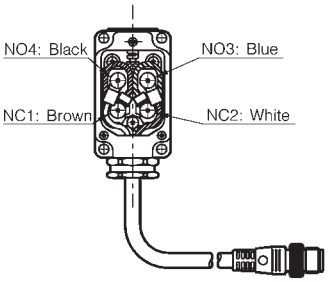

See page F-001

CONNECTOR WITH CABLE

●Model PA5 connectors for connector-type limit switches

Appearance	Power supply	Cable features	Cable length	Catalog listing	Lead color
	DC	Vinyl-insulated cord with high resistance to oil and vibration (UL/NFPA79 CM, CL3)	2 m	**PA5-4ISX2SK**	1: brown, 2: white, 3: blue, 4: black
			5 m	**PA5-4ISX5SK**	1: brown, 2: white, 3: blue, 4: black
	AC		2 m	**PA5-4JSX2SK**	1: brown, 2: white, 3: blue, 4: black
			5 m	**PA5-4JSX5SK**	1: brown, 2: white, 3: blue, 4: black

●Contact pin layout and lead color

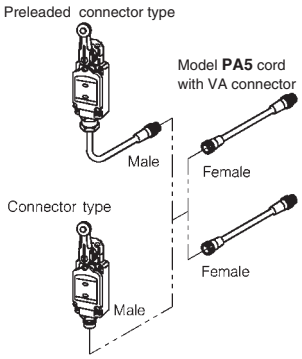

Connector cable	Connector appearance		Pin layout			
			Without indicator lamp	With LED indicator lamp	With neon indicator lamp	Lead colors
AC cable: **-PA** **-PA03**	Switch side (male)	Connector side (female)	4 1 2 3 Contact number	4 3 1 2	Ne 4 1 2 3	1: brown (N.C.) 2: white (N.C.) 3: blue (N.O.) 4: black (N.O.)
DC cable: **-PD** **-PD03**	Switch side (male)	Connector side (female)				

Note: The shape of the connector plugs and sockets is different for AC and DC cables, which are not mutually compatible.

The contact assignments of limit switches comply with Nippon Electric Control Equipment Industries Association standards (NECA 4202).

●Tightening the connector

Align the grooves and rotate the fastening nut on the **PA5** connector by hand until it fits tightly with the connector on the switches side.

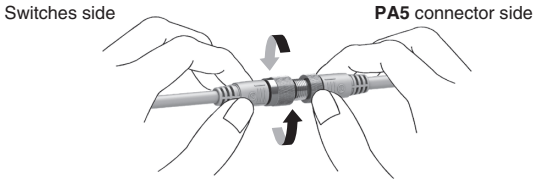

Be sure to use a Model **PA7** connector with cable when connecting Quick Lock type switch.

●Model PA7 connector with cable

Shape	Power supply	Cord properties	Cord length	Catalog listing	Lead colors
	DC	Vinyl-insulated cord with high resistance to oil and vibration (UL/NFPA79 CM)	2 m	**PA7-4ISX2SK**	1: brown, 2: white, 3: blue, 4: black
			5 m	**PA7-4ISX5SK**	1: brown, 2: white, 3: blue, 4: black

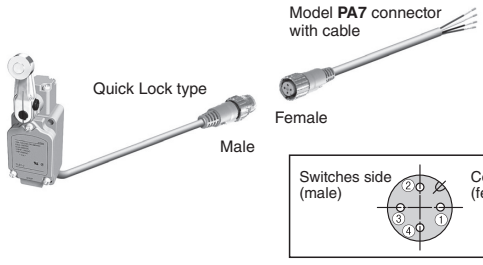

●Tightening the connector

Align the triangle mark and mate the male and female connector then rotate 45 degree to match the keys on the rings by hand.

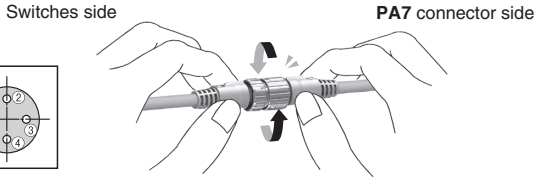

Compatible with OMRON Smartclick connectors.
Smartclick Smartclick is a registered trademark of OMRON Corporation.

●Connector section specifications*1

Item			Preleaded connector type	Quick Lock connector type
Operating voltage/ current range	For AC type		Min. 5V 5 mA. Max. 250 Vac 3A.	
	For DC type		Min. 5V 5 mA. Max. 125 Vdc 3A.	
Insulation resistance			Min. 100 MΩ (by 500 Vdc megger)	Min. 50 MΩ (by 500 Vdc megger)
Dielectric strength			1,500 Vac for 1 minute (between contacts, and between contacts and connector housing)	
Initial contact resistance			Max. 40 mΩ (when 3A current is supplied to connected male and female connectors. Semiconductor lead-specific resistance not included)	
Mating/unmating force			0.4 to 4.0 N per contact	
Mating cycles			50	
Connector nut tightening torque			Max. 0.8 N·m*2	
Cable pullout strength			Min. 100 N	
Vibration resistance			10 to 55 Hz, 1.5 mm peak-to-peak amplitude, 2 hours each in X, Y and Z directions	
Impact resistance			300 m/s², 3 times each in X, Y and Z directions	980 m/s², 10 times each in X, Y and Z directions
Protective structure			IP67 (IEC 529)	
Operating temperature			–10 to +70˚C(freezing not allowed)	
Storage temperature			–20 to +80˚C	
Operating humidity			Max. 95% RH	
Material	Contact		Gold-plated brass	
	Contact holder		Glass-lined polyester resin	
	Housing		Polyester elastomer	
	Coupling		Brass (For DC, Ni-plated. For AC, orange coating)	
	O-ring		NBR (nitrile rubber)	
Recommended tightening torque			0.4 to 0.6 N·m	
Connector cable	Catalog listing	for DC	**PA5-4ISX□SK***3	**PA7-4ISX□SK***3
		for AC	**PA5-4JSX□SK***3	—
	Nominal cross-sectional area, No. of leads		0.5 mm², 4 leads	

*1. Specifications assume the use of a Azbil connector (**PA5/PA7** Series), and apply to 2-circuit double break switches (general-purpose and ultra long-life types).
*2. Tighten firmly by hand. If the connector is not tightened firmly, IP67 protection may be lost, or the connector may come loose.
*3. The number corresponding to □ in the catalog listing indicates the cable length (2 = 2 m, and 5 = 5 m).

Connector with cable
See page F-001

●Connector dimensions

Sealed connector with **LS-PA5□2** 2-lead cable (unit: mm)

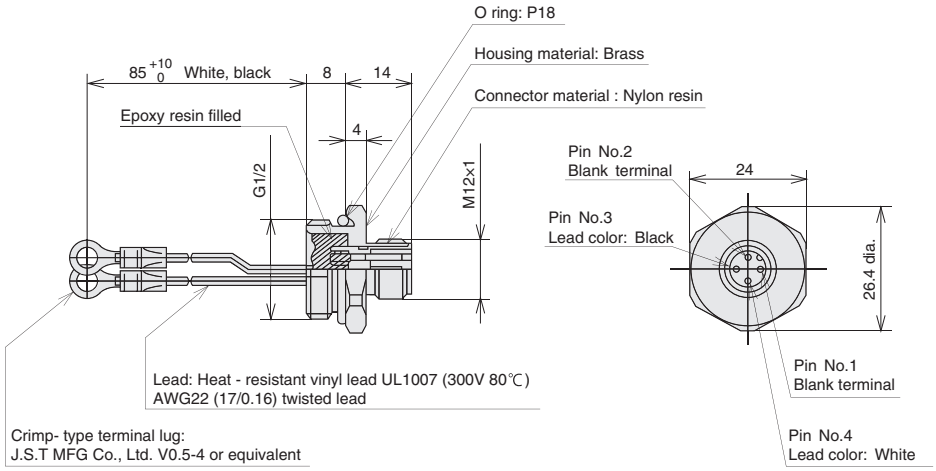

Sealed connector with **LS-PA5□4** 4-lead cable

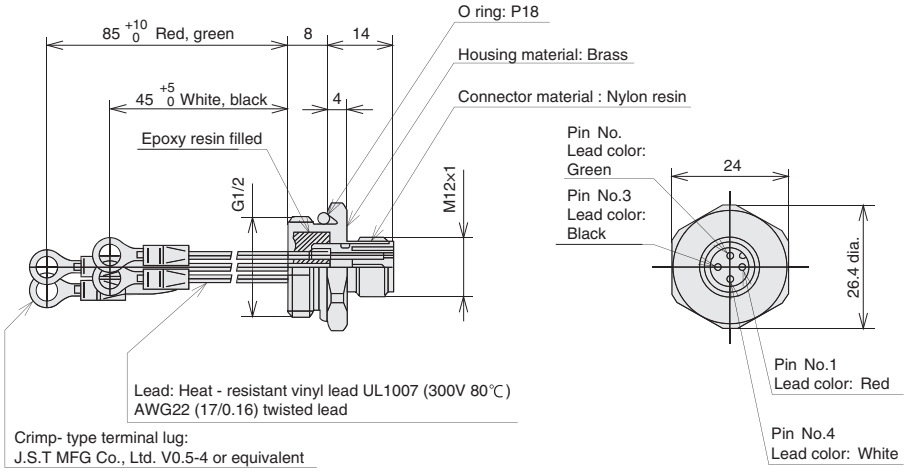

PA5-4□BX03HK4-E connector cable

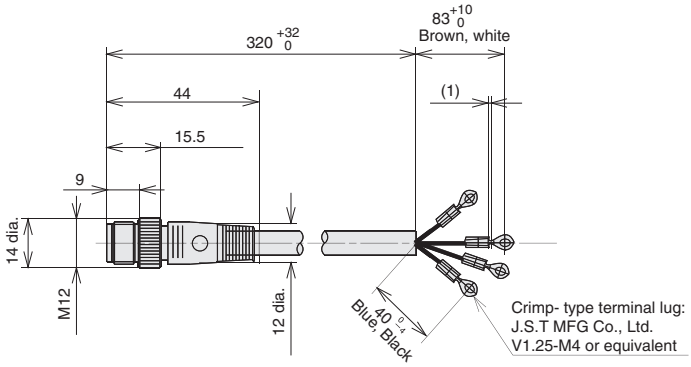

PA1-A10PF sealed connector

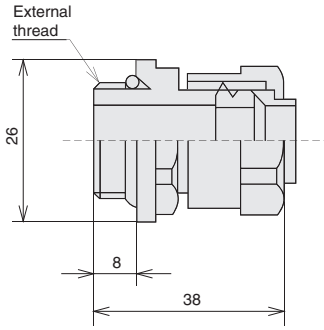

INDICATOR LAMP

Option	Without indicator lamp	With 100/200 Vac neon lamp	With 12 to 125V LED lamp for AC or DC
Catalog listing	□LS□-J	□LS□-JE	□LS□-JEC
Lamp cover front side	—	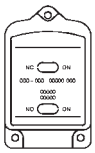	
Circuit diagrams	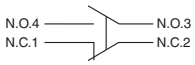	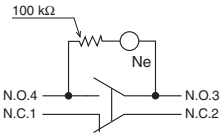	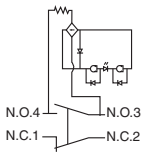
Notes	—	Notes To ensure lighting of the neon lamp, use 75 Vac min.	Notes The voltage indicator lamp (red LED) is 12 to 125V. The indicator lamp operates on either AC or DC power.
Lamp cover catalog listing (replacement part)		LS-29PA1	LS-29PAEC
Specifications	Operating voltage	100 to 200 Vac	12 to 125V, AC or DC
		100 Vac / 200 Vac	12 to 125V
	Thermal current	Approx. 0.5 mA / Approx. 1.5 mA	Max. 0.6 mA
	Resistance	100 kΩ	33 kΩ

●Connection/operation of lamp cover

When set to light in FREE position

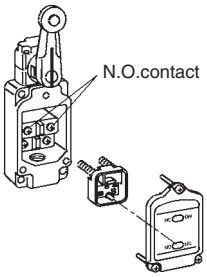

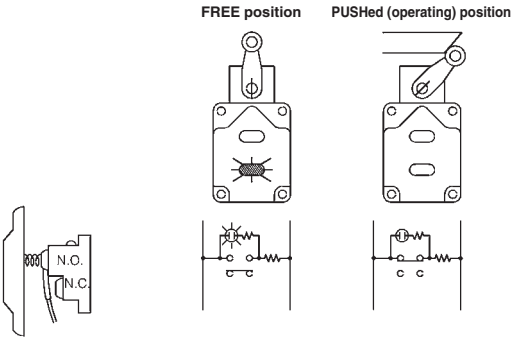

When set to light in PUSHed (operating) position (PUSH)

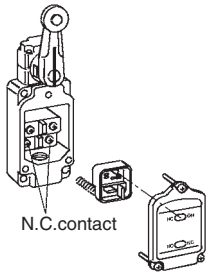

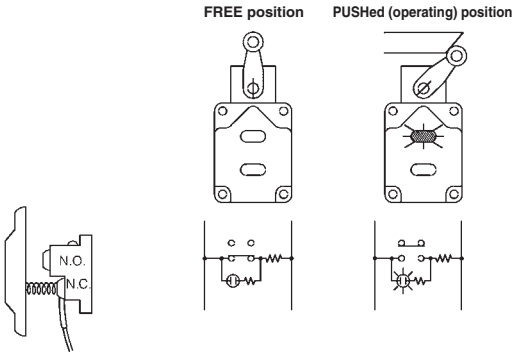

Series connection

Up to six switches can be connected in series when the power is 100V. Programmable controllers can also be connected in series. The brightness of the LED lamp is fixed regardless of the power, as light is generated by a built-in fixed current diode.
(Note that neon lamp type "E" Series switches cannot be connected in series at 100V.)

PC connection possible

The leakage current when the limit switch is not operating is 0.6 mA maximum. The PC will not malfunction due to dim lighting of the LED. Moreover, a fixed-current diode is built in to ensure fixed LED brightness regardless of the voltage.

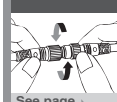

See page F-001

APPEARANCE, OPERATING CHARACTERISTICS AND EXTERNAL DIMENSIONS

Roller lever type

(unit: mm)

Standard type
Heat-resistant type
Cold-resistant type

Corrosion-resistant type

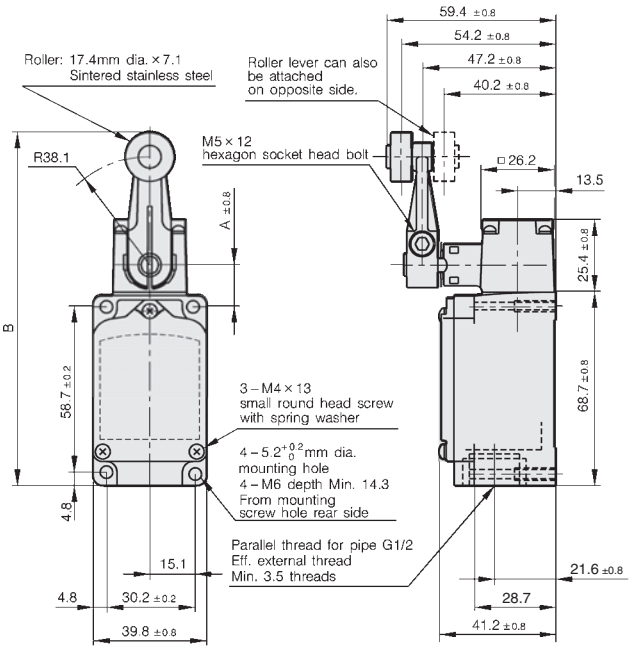

*Dimensional tolerance is ±0.4 unless otherwise specified.

Catalog listing	2-circuit double break	Standard type (-10 to +70˚C)	1LS1-J	1LS19-J	1LS-J500	1LS-J550	1LS-J50
		Heat-resistant type (-10 to +120˚C)	1LS1-JH	1LS19-JH	1LS-J500H	1LS-J550H	1LS-J50H
		Cold-resistant type (-40 to +70˚C)	1LS1-JL	1LS19-JL	1LS-J500L	1LS-J550L	—
		Corrosion-resistant type (-10 to +70˚C)*1	1LS1-JM	1LS19-JM	1LS-J500M	1LS-J550M	—
Operating characteristics			Standard travel, standard characteristics	Standard travel, high sensitivity	High overtravel, standard characteristics	High overtravel, high sensitivity	High overtravel, 90˚ T.T.
UL/CSA/GB			○				—
O.F. (Max. N)			13.4		8.9		
R.F. (Min. N)			2.2		0.98		0.98
P.T. (Max. ˚)			20	5^{+2}_{0}	20	10^{+2}_{-1}	30
O.T. (Min. ˚)			30	30	55	62	60
M.D. (Max. ˚)			12	3	12	5	15
Section A dimensions			14.7±0.8				17.2±0.8
Section B dimensions			125^{REF}				127.5^{REF}

Note *1. Exactly the same as 1**LS1-J** except for different lever shape. For details on the lever shape, see **6PA78-JM** (page D-043, 044).

Adjustable roller lever type

(unit: mm)

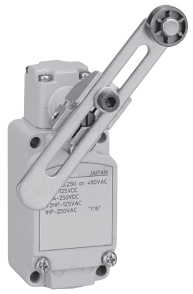

Catalog listing			
Standard type	1LS3-J	1LS-J503	1LS-J553
Heat-resistant (-10 to +120˚C)	1LS-JH	1LS-J503H	—
Cold-resistant (-40 to +70˚C)	1LS3-JL	1LS-J503L	—
Corrosion resistant	1LS3-JM	1LS-J503M	—
Operating characteristics	Standard travel, standard characteristics	High overtravel, standard	High overtravel, high sensitivity
UL/CSA	○(excluding types H, L)		
*O.F. (Max. N)	13.4	8.9	8.9
*R.F. (Min. N)	2.2	0.98	0.98
P.T. (Max. ˚)	20	20	10^{+2}_{-1}
O.T. (Min. ˚)	30	55	62
M.D. (Max. ˚)	12	12	5

*At lever length of 38.1 mm.

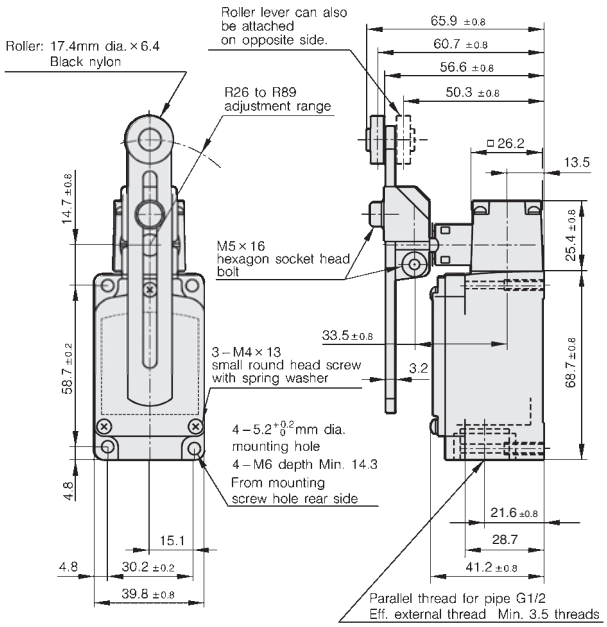

*Dimensional tolerance is ±0.4 unless otherwise specified.

Light operation rod lever type

(unit: mm)

Catalog listing	1LS10-J
Operating characteristics	Standard travel, Standard characteristics
UL/CSA	○
*O.F. (Max. N)	1.4
*R.F. (Min. N)	0.27
P.T. (Max. ˚)	20
O.T. (Min. ˚)	30
M.D. (Max. ˚)	12

*At lever length of 141.2 mm.

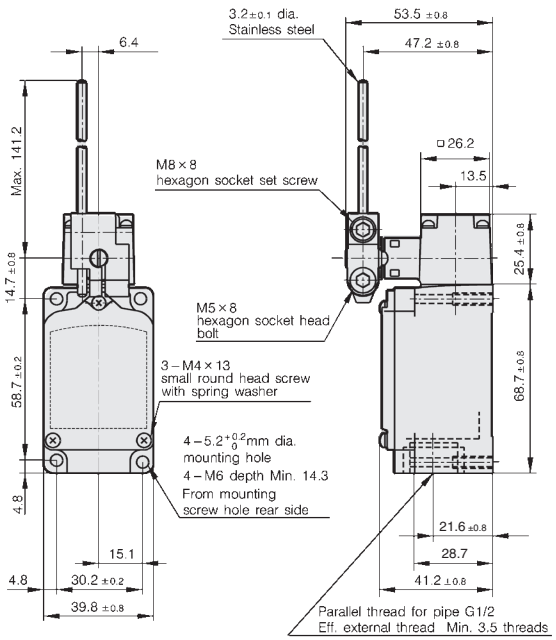

*Dimensional tolerance is ±0.4 unless otherwise specified.

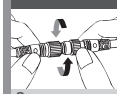

See page F-001

Fork lever lock operation type

(unit: mm)

Actuator type	Fork lever lock operation type		
	Roller opposite side	Roller same side	No roller lever
Catalog listing	6LS1-J	6LS3-J	6LS2-J
UL/CSA	○		
O.F. (Max. N)	13.4		
P.T. (Max. ˚)	60		
O.T. (Min. ˚)	30		
T.T. (˚)	90±10		
Mechanical reverse angle (˚ max)	55		

Note: Values for the lever-less type assume a lever length of 38.1 mm.

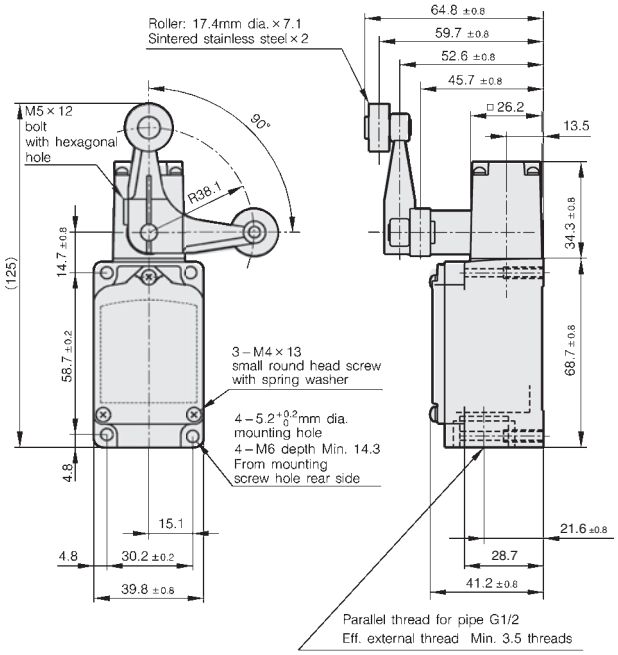

*Dimensional tolerance is ±0.4 unless otherwise specified.

Plunger type

(unit: mm)

Catalog listing		
	Standard type	2LS1-J
	Heat-resistant	2LS1-JH
	Corrosion-resistant type	2LS1-JM
UL/CSA		○(excluding types H)
O.F. (Max. N)		26.7
R.F. (Min. N)		8.9
P.T. (Max. mm)		1.7
O.T. (Min. mm)		6.4
M.D. (Max. mm)		0.51

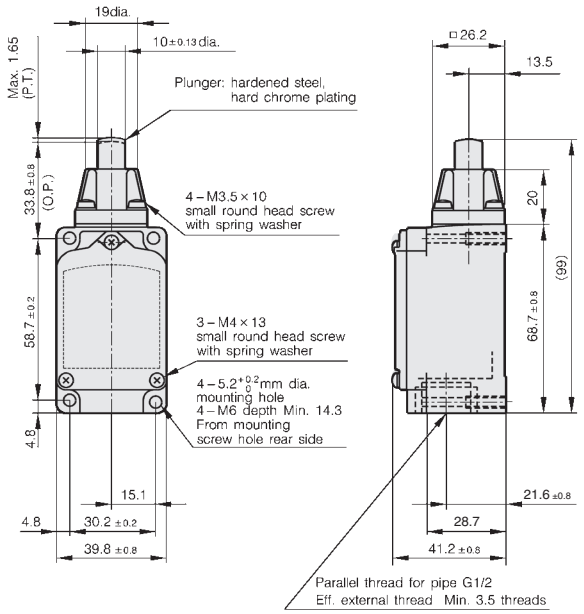

*Dimensional tolerance is ±0.4 unless otherwise specified.

Ball plunger type

(unit: mm)

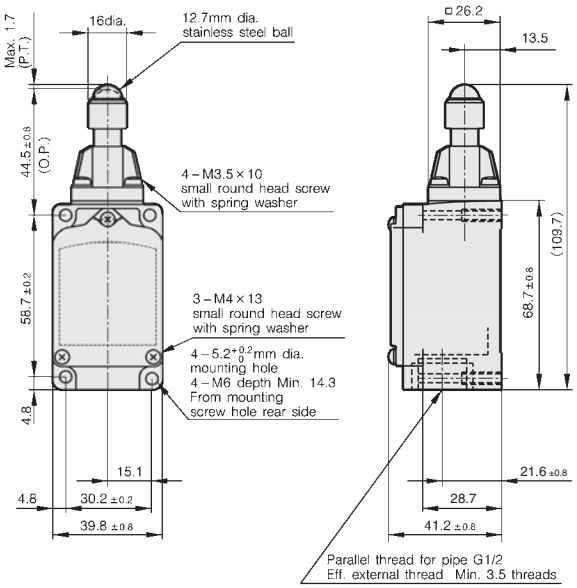

Catalog listing	2LS-J6
UL/CSA	○
O.F. (Max. N)	26.7
R.F. (Min. N)	8.9
P.T. (Max. mm)	1.7
O.T. (Min. mm)	4.0
M.D. (Max. mm)	0.51

*Dimensional tolerance is ±0.4 unless otherwise specified.

Roller plunger type

(unit: mm)

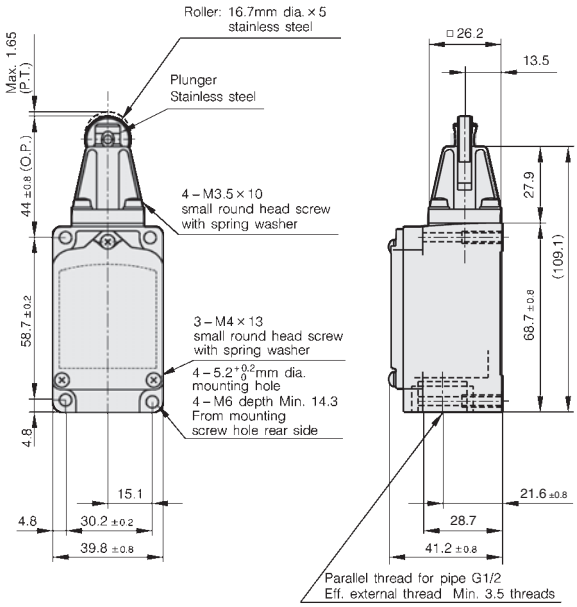

Catalog listing	Standard type	5LS1-J
	Heat-resistant	5LS1-JH
	Cold-resistant	5LS1-JL
UL/CSA		○(excluding types H, L)
O.F. (Max. N)		26.7
R.F. (Min. N)		8.9
P.T. (Max. mm)		1.7
O.T. (Min. mm)		5.6
M.D. (Max. mm)		0.51

*Dimensional tolerance is ±0.4 unless otherwise specified.

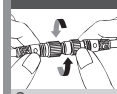

See page F-001

Boot seal roller plunger type

(unit: mm)

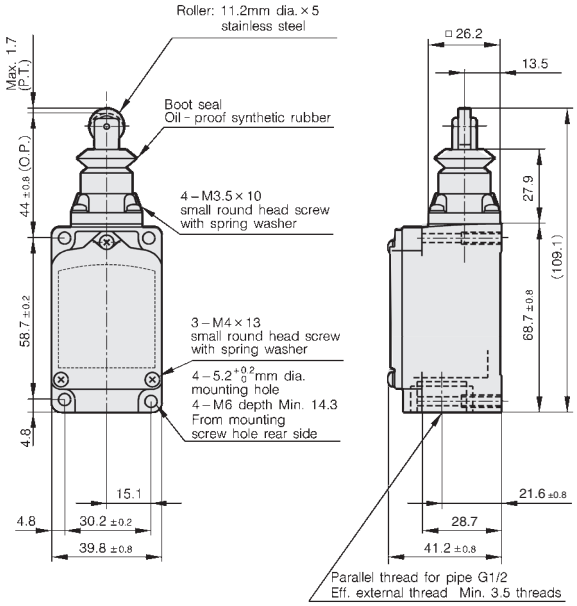

Catalog listing		5LS7-J
UL/CSA		○
O.F.	(Max. N)	15.7
R.F.	(Min. N)	4.4
P.T.	(Max. mm)	1.7
O.T.	(Min. mm)	5.6
M.D.	(Max. mm)	0.51
R.T.	(Min. mm)	0.38

*Dimensional tolerance is ±0.4 unless otherwise specified.

Side roller plunger

(unit: mm)

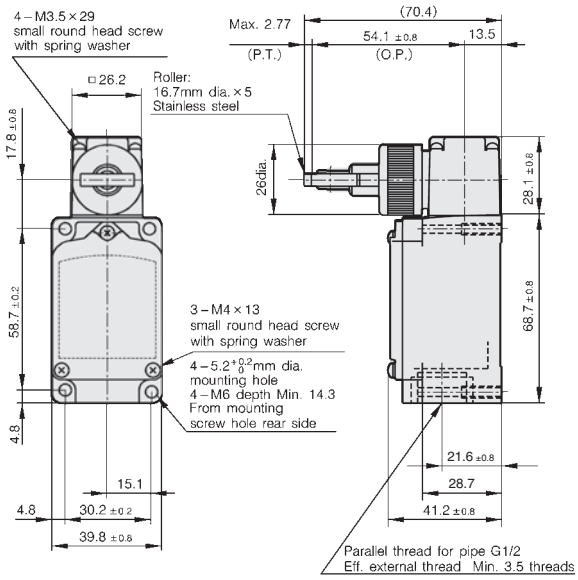

Catalog listing		3LS1-J
UL/CSA		○
O.F.	(Max. N)	40.1
R.F.	(Min. N)	8.9
P.T.	(Max. mm)	2.77
O.T.	(Min. mm)	5.6
M.D.	(Max. mm)	1.02

*Dimensional tolerance is ±0.4 unless otherwise specified.

Non-directional operation type

(unit: mm)

8LS3-J 8LS152-J 8LS125-J

Actuator type		Non-directional operation type		
		Spring rod	Coil spring	Steel wire
Catalog listing	Standard type	8LS3-J	8LS152-J	8LS125-J
	Heat-resistant	8LS3-JH	—	—
	Cold-resistant	—	8LS152-JL	—
UL/CSA		○(excluding H and L types)		
O.F. (Max. N)		1.4*1		0.28
P.T. (Max. mm)		28.6*2		55

*1. 1.7 N max. for 8LS152-JL
*2. 50 mm max. for 8LS152-JL

8LS3-J

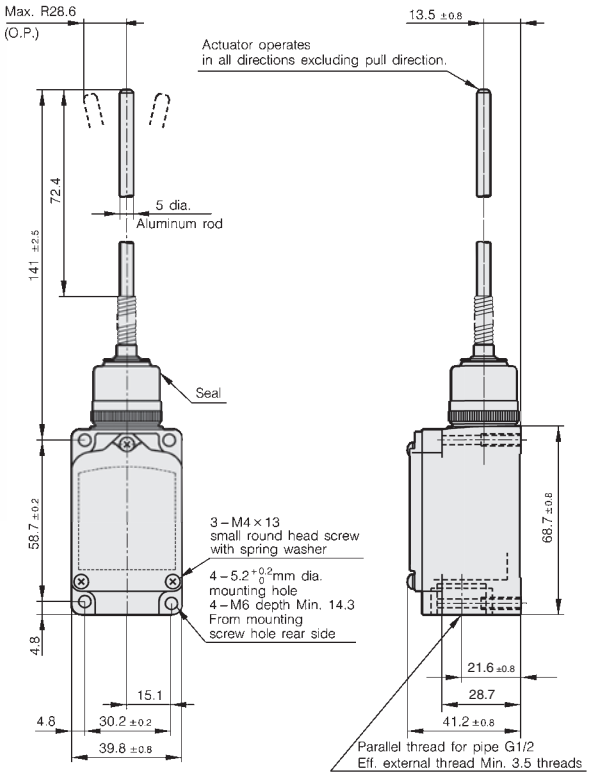

8LS125-J

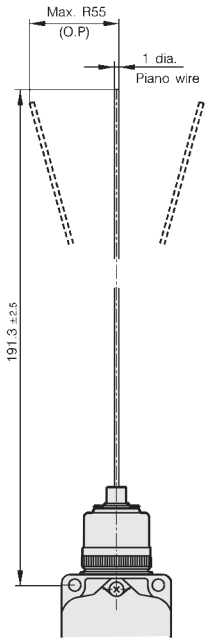

8LS152-J

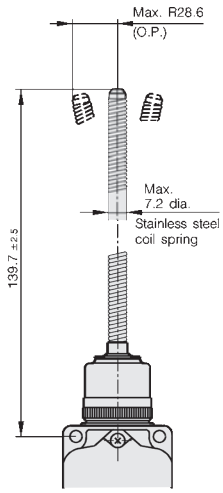

*Dimensional tolerance is ±0.4 unless otherwise specified.

See page F-001

Side rotary type without lever

(unit: mm)

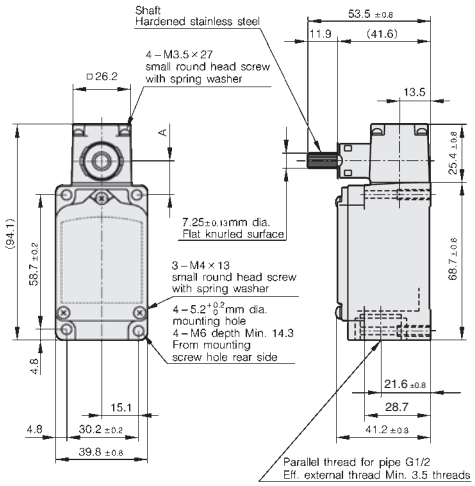

*Dimensional tolerance is ±0.4 unless otherwise specified.

Catalog listing	Standard type	**1LS2-J**	**1LS9-J**	**1LS-J501**	**1LS-J551**	**1LS23-J**	**1LS-J51**
	Heat-resistant	**1LS2-JH**	—	—	—	—	—
	Cold-resistant	—	—	**1LS-J501L**	—	—	**1LS-J51L**
	Corrosion resistant	**1LS2-JM**	—	—	—	—	—
Operating characteristics		Standard travel, standard characteristics	Standard travel, high sensitivity	High overtravel, standard type	High overtravel, high sensitivity	Standard travel, light operation, standard characteristics	High overtravel, 90˚ T.T.
UL/CSA/GB		UL/CSA (excluding types H, L)					
O.F. (Max. N•m)		0.52		0.34		0.22	0.34
R.F. (Min. N•m)		0.086		0.038		0.029	0.019
P.T. (Max. ˚)		20	5 +2 0	20	10 +2 0	20	30
O.T. (Min. ˚)		30	30	55	62	30	60
M.D. (Max. ˚)		12	3	12	5	12	15
Catalog listing with lever		**1LS1-J**	**1LS19-J**	**1LS-J500**	**1LS-J550**	**1LS10-J**	**1LS-J50**
Section A dimensions				14.7±0.8			17.2±0.8

Roller lever type with indicator lamp (typical catalog listing 1LS1-JEC)

(unit: mm)

Catalog listing	**1LS1-JEC**
UL/CSA	○
O.F. (Max. N)	13.4
R.F. (Min. N)	2.2
P.T. (Max. ˚)	20
O.T. (Min. ˚)	30
M.D. (Max. ˚)	12

*For models other than **1LS1-JEC**, all dimensions except those of the actuator are exactly the same.

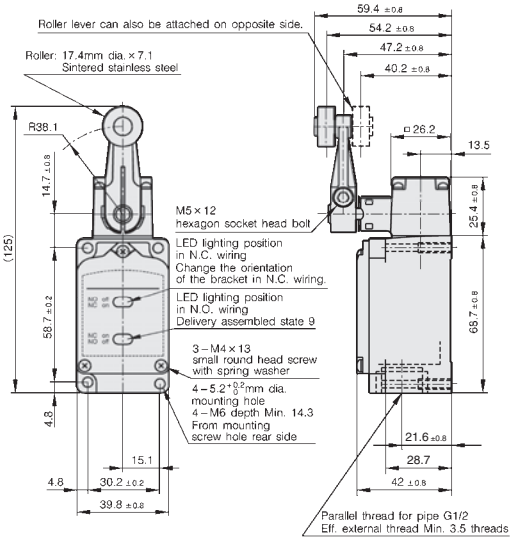

*Dimensional tolerance is ±0.4 unless otherwise specified.

CONNECTOR TYPE APPEARANCE, OPERATING CHARACTERISTICS AND EXTERNAL DIMENSIONS

●Connector type

Roller lever type

(unit: mm)

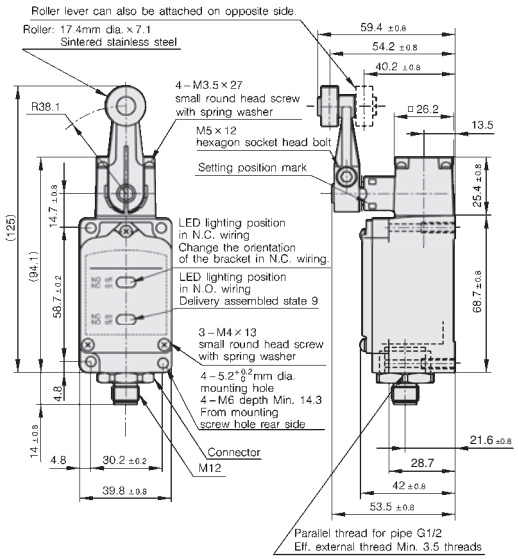

*Dimensional tolerance is ±0.4 unless otherwise specified.

Basic catalog listing	1LS1-J	1LS19-J	1LS-J550
Quick connector for DC	1LS1-JEC-PD	1LS19-JEC-PD	1LS-J550EC-PD
Operating characteristics	Standard travel, standard characteristics	Standard travel, high sensitivity	High overtravel, high sensitivity
O.F. (Max. N)	13.4		8.9
R.F. (Min. N)	2.2		0.98
P.T. (Max. ˚)	20	5^{+2}_{0}	10^{+2}_{-1}
O.T. (Min. ˚)	30	30	62
M.D. (Max. ˚)	12	3	5

Roller plunger type

(unit: mm)

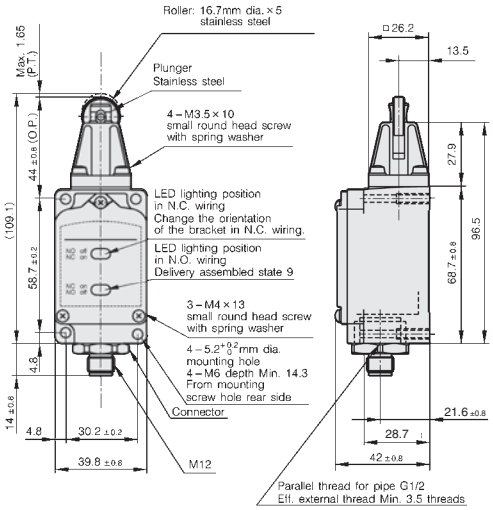

Basic catalog listing	5LS1-J
Quick connector for DC	5LS1-JEC-PD
O.F. (Max. N)	26.7
R.F. (Min. N)	8.9
P.T. (Max. mm)	1.7
O.T. (Min. mm)	5.6
M.D. (Max. mm)	0.51

*Dimensional tolerance is ±0.4 unless otherwise specified.

Connector with cable
See page F-001

Boot seal roller plunger type

(unit: mm)

Basic catalog listing	5LS7-J
Quick connector for DC	5LS7-JEC-PD
O.F. (Max. N)	15.7
R.F. (Min. N)	4.4
P.T. (Max. mm)	1.7
O.T. (Min. mm)	5.6
M.D. (Max. mm)	0.51

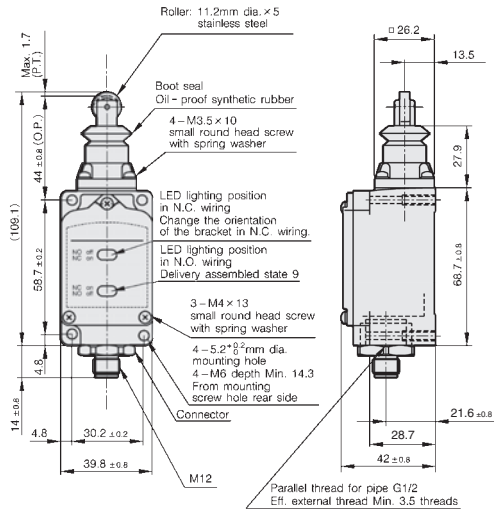

*Dimensional tolerance is ±0.4 unless otherwise specified.

●Preleaded connector type

Roller lever type

(unit: mm)

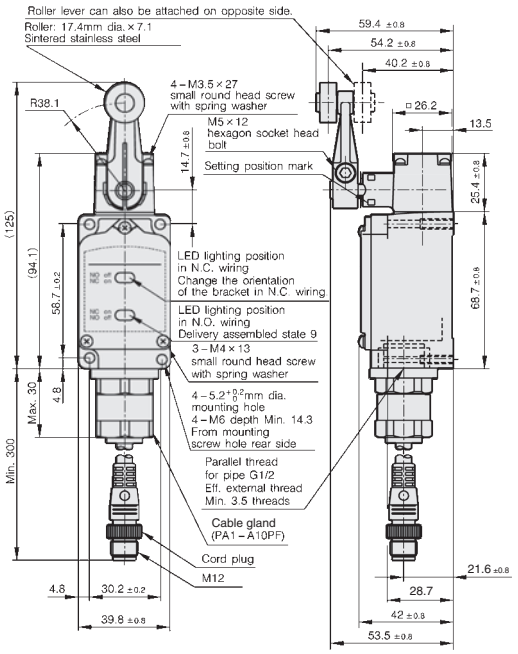

*Dimensional tolerance is ±0.4 unless otherwise specified.

Basic catalog listing	1LS1-J	1LS19-J	1LS-J550
Preleaded connector for DC, cable length 0.3 m	1LS1-JEC-PD03	1LS19-JEC-PD03	1LS-J550EC-PD03
UL/CSA (C-UL)	○	○	○
O.F. (Max. N)	13.4		8.9
R.F. (Min. N)	2.2		0.98
P.T. (Max. ˚)	20	5^{+2}_{0}	10^{+2}_{-1}
O.T. (Min. ˚)	30	30	62
M.D. (Max. ˚)	12	3	5

Roller plunger type

(unit: mm)

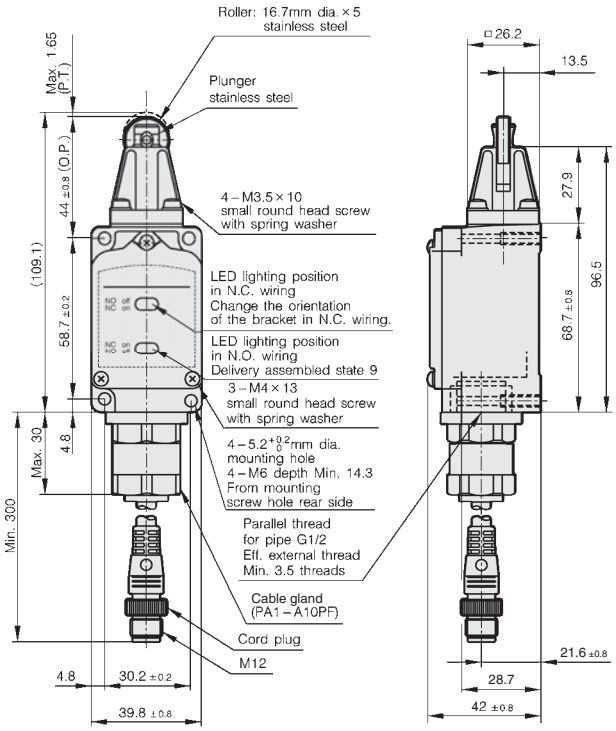

Basic catalog listing	5LS1-J
Preleaded connector for DC, cable length 0.3 m	5LS1-JEC-PD03
UL/CSA (C-UL)	○
O.F. (Max. N)	26.7
R.F. (Min. N)	8.9
P.T. (Max. mm)	1.7
O.T. (Min. mm)	5.6
M.D. (Max. mm)	0.51

*Dimensional tolerance is ±0.4 unless otherwise specified.

Boot seal roller plunger type

(unit: mm)

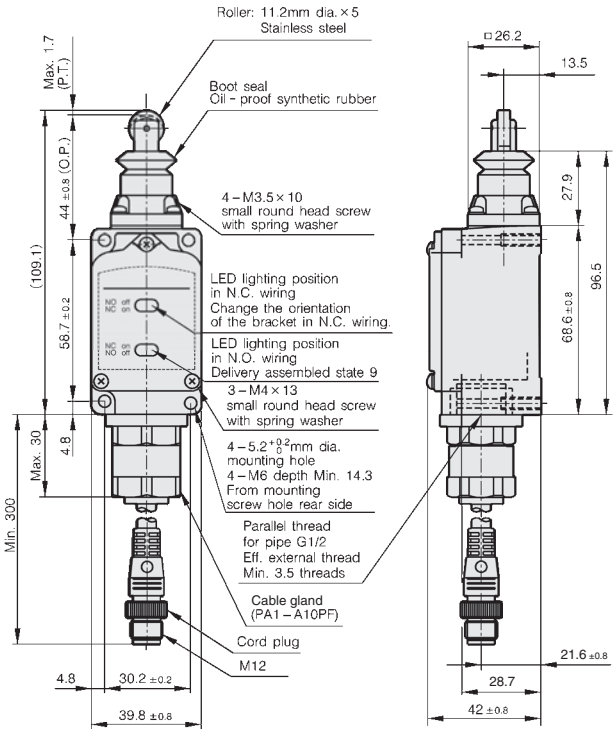

Basic catalog listing	5LS7-J
Preleaded connector for DC, cable length 0.3 m	5LS7-JEC-PD03
UL/CSA (C-UL)	○
O.F. (Max. N)	15.7
R.F. (Min. N)	4.4
P.T. (Max. mm)	1.7
O.T. (Min. mm)	5.6
M.D. (Max. mm)	0.51

*Dimensional tolerance is ±0.4 unless otherwise specified.

Connector with cable
See page F-001

Auxiliary parts

●Lamp cover

Catalog listing	LS-29PA1 (standard type)	LS-9PAW (spatter-guarded)	LS-29PAEC (standard type)	LS-9PAWC (spatter-guarded)
Specifications	Neon lamp for 100/200 Vac		LED lamp for 12 to 125 Vac/dc	
Appearance	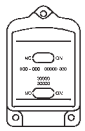			

●Shaft cover

Catalog listing	Material	Shape
PA-J269	Silicone rubber (Black)	 (10 pieces per set)

●Auxiliary actuators

Catalog listing	Appearance	Compatible switch	Size/material of roller actuator	Lever length(mm)	Lever tightening method and material
6PA78-J		1LS Series	ϕ17.4 × 7.1 Sintered stainless steel roller	38.1	M5 hexagon socket head bolt. Chrome molybdenum steel.
6PA-J148					M5 hexagon socket head bolt. Stainless steel.
6PA78-JW (spatter-guarded)					
6PA78-JM (stainless steel)			ϕ19 × 7.1 Black nylon roller		M5 lock nut. Distance across flats 8 mm. Stainless steel.
6PA-J45			ϕ17.4 × 7.1 Sintered stainless steel roller		M5 double lock nut. Distance across flats 8 mm. Stainless steel.
6PA-J45W (spatter-guarded)					
LS-6PA79-201				50	M5 hexagon socket head bolt. Stainless steel.
PA-J11				60	M5 hexagon socket head bolt. Chrome molybdenum steel.
6PA44-J			ϕ17.4 × 6.4 Black nylon roller	26 to 89	M5 hexagon socket head bolt. Chrome molybdenum steel.
LS-6PA58			ϕ17.4 × 7.1 Sintered stainless steel roller		M5 hexagon socket head bolt. Stainless steel.
6PA-J54	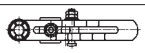		ϕ17.4 × 6.4 Black nylon roller	26 to 89	M5 double lock nut. Distance across flats 8 mm. Stainless steel.
6PA63-J			ϕ3.2 Hardened stainless steel rod	304.6	M5 hexagon socket head bolt. Chrome molybdenum steel.
6PA-J40			ϕ2.3 Piano wire	255	M5 lock nut. Distance across flats 8 mm.
6PA43-J		1LS10-J Series	ϕ3.2 Stainless steel	141.2 max.	M5 hexagon socket head bolt. Chrome molybdenum steel.
6PA-J176					M5 hexagon socket head bolt. Stainless steel.
6PA74-J (rollers on same side)		6LS Series	ϕ17.4 × 7.1 Sintered stainless steel roller	38.1	M5 hexagon socket head bolt. Chrome molybdenum steel.
6PA80-J (rollers on both sides)					M5 hexagon socket head bolt. Chrome molybdenum steel.

AUXILIARY PART DIMENSIONS

(unit: mm)

Lamp cover

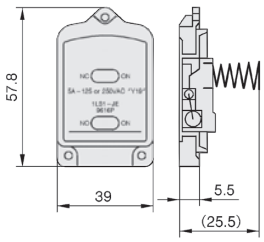

LS-29PA1, LS-9PAW
LS-29PAEC, LS-9PAWC

Auxiliary actuators

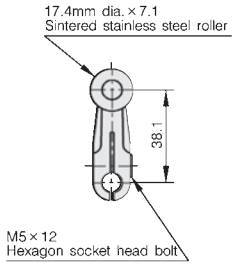

6PA-J148, 6PA78-J
6PA78-JW

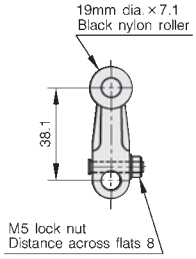

6PA78-JM

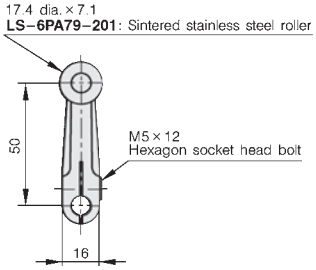

LS-6PA79-201

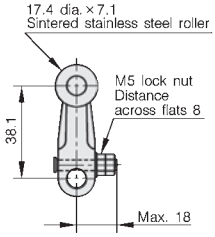

6PA-J45
6PA-J45W

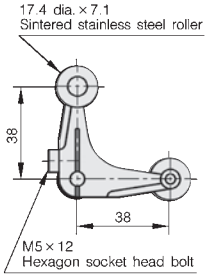

6PA80-J

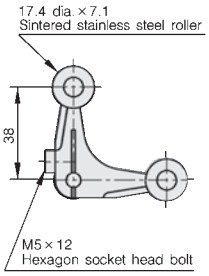

6PA74-J

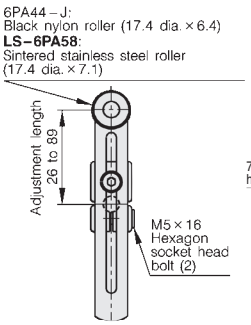

6PA44-J
LS-6PA58

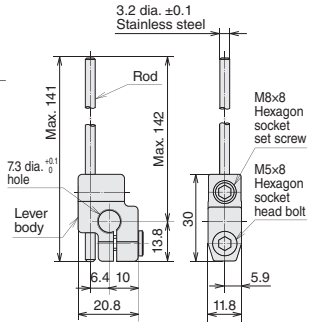

6PA43-J
6PA-J176

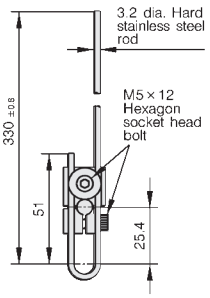

6PA63-J

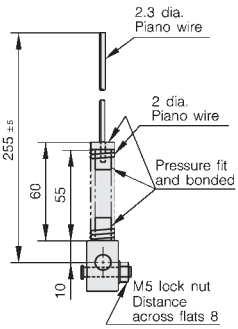

6PA-J40

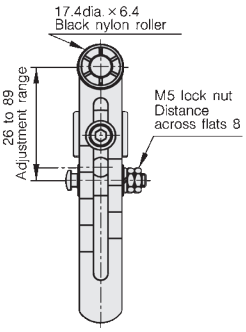

6PA-J54

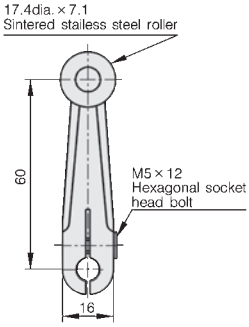

PA-J11

See page F-001

WHEN USING LS SERIES LIMIT SWITCHES

1. Changing the position of the operating head

The operating head can be set to four positions. To set to the desired position, remove the four head tightening screws and rotate the head 90˚ to one of the four different positions. When changing the direction of the operating head, change the direction of the internal plunger at the same time (excluding **1LS-J500**, **1LS-J550** and **1LS-J50**). The roller plunger can be set to one of two different positions 90˚ apart.

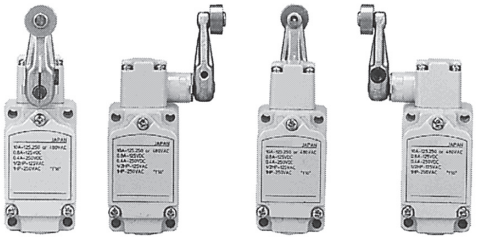

2. Changing the operating direction of roller lever type

The operation direction can be set to three sequences (excluding **1LS-J500**, **1LS-J550** and **1LS-J50**). Lever type limit switches can be set to operate electrically when moved either clockwise or counterclockwise by changing the direction of the internal stepped plunger.

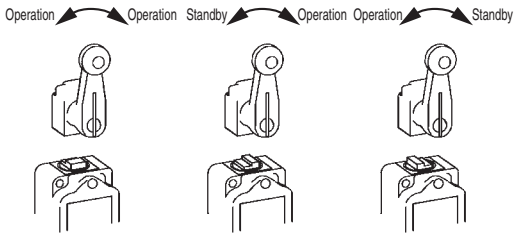

3. Indicating the operation set position on the roller lever type

Excessive or insufficient pushing of the lever can be eliminated to ensure stable prolonged use by setting so that the pointer that rotates with the lever enters the head's protrusion zone. The position of the protrusion zone varies with different model types, such as standard , high sensitivity, and 90˚ T.T. types.

3.1 Standard type (1LS1-J□, 1LS-J50□Series)

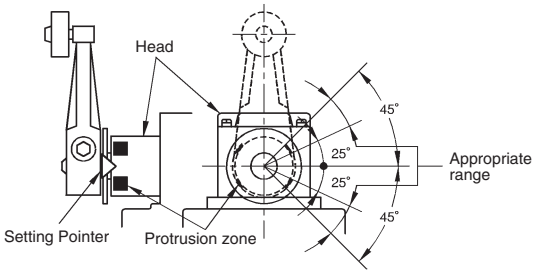

3.2 High-sensitivity type (1LS19-J□, 1LS-J55□Series)

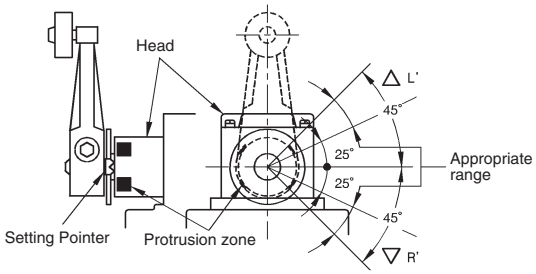

4. Indicating the operation set position of roller plunger type (5LS1-J□)

The indentation on the roller plunger is for preventing excessive or insufficient plunger operation. Determine the position of the actuating element so that the indentation on the plunger fits into the top surface of the bushing.

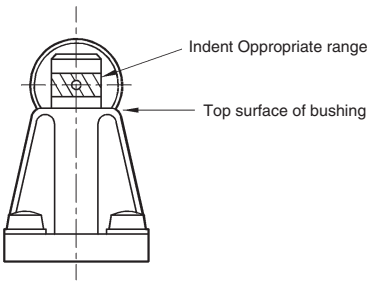

5. How to set the actuating element

5.1 Roller lever type

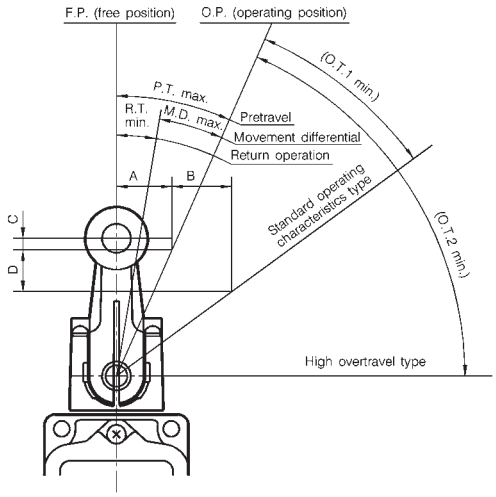

Symbol / Model	Operating angle (˚)				
	P.T.	O.T.1	O.T.2	R.T.	M.D.
1LS1-J□	20	30	—	5	12
1LS19-J□	5^{+2}_{0}	30	—	1.5	3
1LS-J500□	20	—	55	5	12
1LS-J550□	10^{+2}_{-1}	—	62	5	5

Symbol / Model	Operating force (N)		A,B,C,D distance (mm)			
	O.F.	R.F.	A	B	C	D
1LS1-J□	13.4	2.2	13.0	16.1	2.3	11.3
1LS19-J□	13.4	2.2	3.3	18.5	0.1	6.7
1LS-J500□	8.9	0.98	13.0	23.8	2.3	25.9
1LS-J550□	8.9	0.98	6.6	29.6	0.6	25.7

Key to the abbreviations used in the above tables:

P.T. : Pretravel
O.T. 1 : Overtravel (standard switch)
O.T. 2 : Overtravel (high overtravel switch)
R.T. : Return operation
M.D. : Movement differential
O.F. : Operating force
R.F. : Release force

5.2 Height from switch mounting hole to actuating element

Roller lever type

For roller lever type switches, we recommend setting the distance from the switch mounting hole to the actuating element as shown below.

Example: **1LS1-J** (unit: mm)

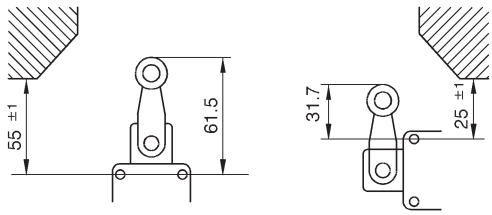

Roller plunger type

For roller plunger type switches, we recommend setting the distance from the switch mounting hole to the actuating element as shown below.

Example: **5LS1-J** (unit: mm)

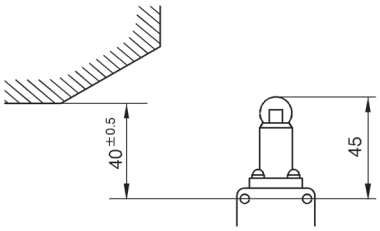

6. Handling the connector and preleaded connector

6.1 Tightening the fixing cap ring and outside screw lock ring

If the screw of the mating part is made of resin, the threads can easily be damaged when the connector is first tightened. When assembling the connector, align the center of the cores, push in as far as possible, and then turn to tighten.
Be sure to tighten fully by hand. The recommended tightening torque is 0.4 to 0.6 N·m. Use of a tightening tool may damage the connector. If the connector is not tightened firmly, IP67 protection may be lost, or the connector may come loose.

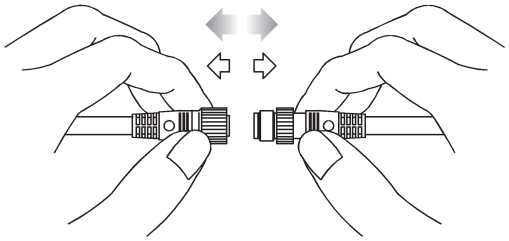

6.2 Inserting and removing connectors

Before inserting or removing connectors, be sure to the turn the power OFF. When removing, hold the connector itself--do not pull by the cable.

See page F-001

6.3 Cautions when bending cables

The minimum bend radius (R) of the cable is 80 mm. Allow sufficient cable for bends.

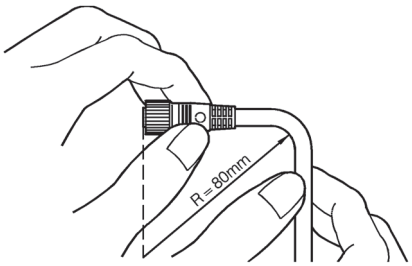

6.4 Installation of connector type switches

(unit: mm)

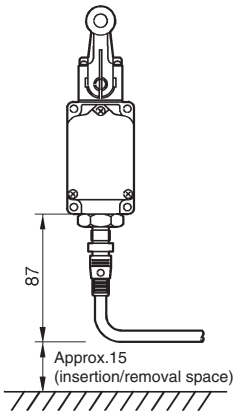

6.5 Cautions when replacing connectors

When removing connectors to replace the switch or cable, wipe the connector and the surrounding area thoroughly to remove any water. After removing the connector, do not allow it to be immersed in chemicals or powder, or to be dropped. If the connector is immersed in a fluid, allow it to fully dry before connecting again. If the connector is dropped in powder, wipe it off completely before connecting again. Failure to observe these precautions may result in a short circuit or a failed connection.

7. Other

7.1 Protective structure

- IP67 protection does not assure complete waterproofing. Switch should not be in constant contact with water.
- Avoid use where external force is applied at all times on the connecting section of the connector.
- Do not use the body as a step or place heavy objects on top of it.

7.2 Ensuring a good seal

- When general-purpose limit switches are used in locations subject to splashing by water, oil, dirt and dust, or chips, water or oil sometimes enters the switch from the conduit due to capillary action. For this reason, be sure to use a sealed connector compatible with the cable.
- When the screws in the head or covers are loosened to change the operating direction of the switch, or the relationship between switch operation and the indicator lamp (lamp ON during switch standby / during switch operation), tighten the screws to the recommended tightening torque to ensure a good seal.

Recommended tightening torque
Cover: 1.3 to 1.7 N·m (M4 screw)
Head: 0.8 to 1.2 N·m (M3.5 screw)

7.3 Attaching switches

- Tighten each of the parts on the limit switch according to the appropriate tightening torques listed in the performance tables. Overtightening damages screws and other parts. On the other hand, insufficient tightening of screws lowers the effectiveness of the seal and reduces various performance characteristics.
- Do not leave or use covers and conduit parts open. Water, dirt, or dust may enter, which causing malfunction.
- Prevent impact to the lever body and head. Failure to do so might deform the actuator or cause defective switch return.
- Do not use silicone rubber electrical lead insulation, silicone adhesive or grease containing silicone. Doing so might result in defective electrical conductivity.

7.4 Wiring

- Do not perform wiring with the power ON. Doing so might cause electric shock, or the machine may start unexpectedly, causing an accident.
- Use crimp-type terminal lugs with covered insulation for electrical leads to prevent contact with covers and housings. If a crimp-type terminal lug contacts a cover, the cover may no longer shut or a ground fault may occur.
- Use sealed connectors (**PA1** Series, etc. sold separately) or flexible tubing (**PA3** Series) with IP67 or equivalent seal for conduits.
- Firmly tighten covers and conduits. If covers and conduits are not sufficiently tightened, the seal will be impaired and switch performance will no longer be assured.

7.5 Adjusting switches

- Do not apply excessive force (5 times O.F.) to the actuator beyond the total travel position. Doing so might damage the switch.
- Keep overtravel between 1/3 to 2/3 of the rated value. Small overtravel might cause the contacts to rattle due to vibration and impact, or may result in defective contact.

8. Environment

- Do not use the product in an environment where the cover may directly come into contact with any strong volatile solvent.
- Do not use the switch in an environment where strong acid or alkali is directly splashed onto it.

9. Other cautions

- Do not apply a lubricant to the sliding part of the actuator or any other component. Application of an inappropriate lubricant may degrade sliding performance or impair the protective structure.
- Remove any foreign substances adhering to the sliding part. Dust or any other foreign substance attached to the sliding part may cause a malfunction.
- Check the actual load.
  To increase reliability, confirm that the switch has no problems in actual use before using the switch.

Before use, thoroughly read the “Precautions for use” and “Precautions for handling” in the Technical Guide on pages **D-101** to **D-112** as well as the instruction manual and product specification for this switch.

Please read “Terms and Conditions” from the following URL before ordering and use.

https://www.azbil.com/products/factory/order.html

Azbil Corporation
Advanced Automation Company

Yamatake Corporation changed its name to Azbil Corporation on April 1, 2012.

1-12-2 Kawana, Fujisawa
Kanagawa 251-8522 Japan

URL: https://www.azbil.com

1st Edition : Jan. 2018

CP-GC1003E Vol.2